UD info Corp.

Industrial M.2 2280 PCIe SSD
M2P-80DL Series
Product DataSheet



© 2024 UD INFO Corp. All right reserved.
Specifications are subject to change without prior notice.

3F-4, No.8, Ln. 609, Sec. 5, Chongxin Rd., Sanchong Dist., New Taipei City 241, Taiwan (R.O.C.)
TEL: +886-2-7713-6050 FAX: +886-2-8511-3151
E-mail: sales@UDinfo.com.tw

1. Introduction 7

1.1. General Description 7

1.2. Block Diagram 7

2. Product Specifications 8

2.1. Product Specifications 8

2.2. Device Capacity 8

2.3. Performance 9

2.4. POR/SPOR Standby Ready Time 11

2.5. Thermal Throttling 12

2.6. TCG Opal 2.0 (Optional) 14

3. Environmental Specifications 15

3.1. Environmental Conditions 15

3.1.1. Temperature Specification 15

3.1.2. Mechanical Specification 15

3.1.3. Electrostatic Discharge (ESD) 15

3.1.4. EMI Compliance 16

3.1.5. Certification & Compliance 16

3.2. TBW (TeraBytes Written) and DWPD (Drive Write Per Day) 16

3.3. UBER 17

3.4. MTBF 17

4. Electrical Specifications 18

4.1. Supply Voltage 18

4.2. Power Consumption 18

5. Interface 19

5.1. Pin Assignment and Descriptions 19

6. Supported Commands 22

6.1. NVMe Command List 22

6.2. Identify Device Command 23

6.3. SMART Attributes 30

7. Physical Dimension 32

8. Terminology 34
9. Barcode Description 34
10. Partnumber Decoder 35

Revision History

Revision	Draft Date	History	Author
1.0	2023/2/2	New release	Golden Lee
1.1	2023/3/29	Removed safety certification	Golden Lee
1.2	2024/3/19	Added 128GB information	Golden Lee
1.3	2024/10/16	Added 4TB information	Golden Lee

Product Overview

- **Capacity**
  - 128GB up to 4TB
- **Form Factor**
  - M.2 2280-S2-M
- **PCIe Interface**
  - PCIe Gen4 x4
  - NVMe 1.4
  - PCI Express Base 4.0
- **Flash Interface**
  - 128GB = 128GB (DDP) x 1pcs
  - 256GB = 128GB (DDP) x 2pcs
  - 512GB = 256GB (QDP) x 2pcs
  - 1TB = 256GB (QDP) x 4pcs
  - 2TB = 512GB (ODP) x 4pcs
  - 4TB = 1024GB (ODP) x 4pcs
- **Performance**[Note1]
  - Seq. Read up to 4,900 MB/s
  - Seq. Write up to 3,700 MB/s
  - Ran. 4K Read up to 700K IOPS
  - Ran. 4K Write up to 800K IOPS
- **Power Consumption**[Note5]
  - Active mode (Max.): < 5.5W
  - Idle mode: < 1.5W
- **Reliability**
  - MTBF[Note3]: 2 million hours
  - UBER[Note4]: < 1 sector per 10^{16} bits
  - DWPD > 0.6
  - TBW: 128GB -> 86 TB
    256GB -> 248 TB
    512GB -> 661 TB
    1TB -> 1,341 TB
    2TB -> 2,876 TB
    4TB -> 5,107 TB
- **ECC**
  - LDPC (Low Density Parity Check)
  - RAID ECC
- **Power Management (Optional)**
  - PS0/PS1/PS2/PS3/PS4
  - Support APST
  - Support ASPM
  - Support L1.2 (<5mW)
- **Temperature Range**[Note2]
  - Operation Temperature:
    - Standard: 0°C ~ 70°C
    - Wide: -40°C ~ 85°C
  - Storage Temperature: -40°C ~ 85°C
- **Environment Specification**
  - Shock: $1500G_{0\text{-}P}$/0.5ms duration
  - Vibration: 20Hz~80Hz/1.52mm
    80Hz~2000Hz/$20G_{P\text{-}P}$
  - Drop: 80cm height/each face
  - Conflicting Material: Concrete floor
- **RoHS Compliant**
- **EMI Compliant**
  - EN55032, CISPR 32 (CE)
  - AS/NZS CISPR 32 (CE)
  - ANSI C63.4 (FCC)
  - CNS 13438 (BSMI)
  - VCCI-CISPR 32 (VCCI)
- **Features Support List**
  - Dynamic SLC Cache
  - HMB (Host Memory Buffer)
  - TCG Pyrite/OPAL[Note6]
  - ETEDPP (End to End Data Path Protection)
  - Read Only Mode (End of Life)

Notes:

1. For more details on Performance, please refer to Chapter 2.3.
2. The operation temperature means NAND case temperature, which mechanism is described in Chapter 2.5.
3. Mean Time Between Failure (MTBF)
4. Uncorrectable Bit Error Rate (UBER)
5. For more details on Power Consumption, please refer to Chapter 4.2.
6. Supported by different production settings and firmware version.

1. INTRODUCTION

1.1. General Description

UDinfo's M.2 2280 PCIe solid state Drive delivers all the advantages of flash disk technology with PCIe Gen4 x4 interface and is fully compliant with the standard Next Generation Form Factor (NGFF) called M.2 form factor, providing low power consumption compared to traditional hard drive and hot-swapping when removing/replacing/upgrading flash disks. The device is designed based on the M.2 2280 standard. It offers up to 4TB and performance can reach up to 4,900MB/s read as well as 3,700MB/s write high performance based on 112Layers 3D TLC NAND flash.

1.2. Block Diagram

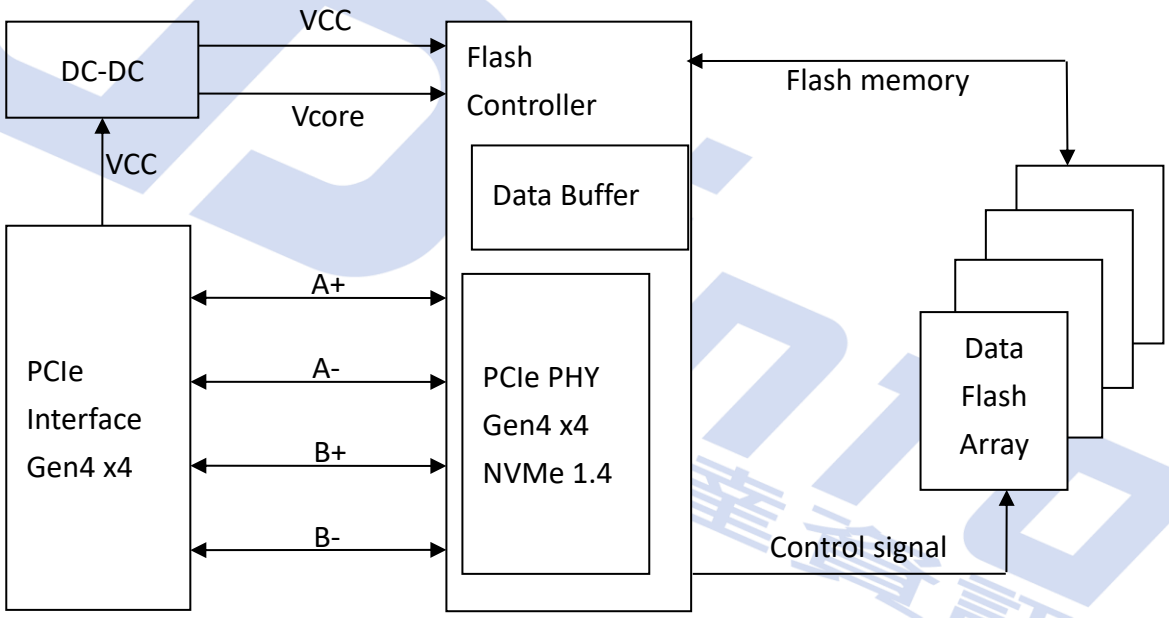

M.2 2280 PCIe SSD Block Diagram

2. PRODUCT SPECIFICATIONS

2.1. Product Specifications

- **Capacity**
  - 128GB up to 4TB
- **Electrical/Physical Interface**
  - PCIe Interface
  - PCI Express Base Ver 4.0
  - Compliant with NVMe 1.4
  - PCIe Gen4 x 4 lane & backward compatible to PCIe Gen3, Gen2 and Gen1
  - Support up to QD 128 with queue depth of up to 64K
  - PCI Express M.2 Specification Revision 4.0, Version 1.0

2.2. Device Capacity

Capacity	IDEMA Standard		User Data Size
	512Bytes/Sector	4KBytes/Sector	
	Total Sectors (LBA)	Total Sectors (LBA)	
128GB	250,069,680	31,258,710	Depended on file management
256GB	500,118,192	62,514,774	
512GB	1,000,215,216	125,026,902	
1TB	2,000,409,264	250,051,158	
2TB	4,000,797,360	500,099,670	
4TB	8,001,573,552	1,000,196,694	

Notes:

1. 1 Gigabyte (GB) is equal to 1,000,000,000 Bytes; 1 sector is equal to 512 Bytes or 4K Bytes.
2. The calculation is following IDEMA Standard.
3. The total actual user data size of the SSD may be less than device capacity due to SSD format, SSD partition, operating system.

   EX: OS shows 238.47GB (NTFS) with 256GB SSD.

2.3. Performance

- **Burst Sequential Read/Write Performance (MB/s)**

Capacity	Flash Structure	Sequential (MB/s) Standard-Temp.		Sequential (MB/s) Wide-Temp.	
		Read	Write	Read	Write
128GB	128GB x1, BGA(DDP) 112Layers	1,850	850	1,450	550
256GB	128GB x2, BGA(DDP) 112Layers	3,800	1,700	3,000	1,100
512GB	256GB x2, BGA(QDP) 112Layers	4,900	3,200	3,700	2,000
1TB	256GB x4, BGA(QDP) 112Layers	4,900	3,700	3,700	3,000
2TB	512GB x4, BGA(ODP) 112Layers	3,550	3,150	3,400	3,000
4TB	1TB x4, BGA(ODP) 112Layers	3,550	3,100	-	-

- **Sustained Sequential Read/Write Performance (MB/s)**

Capacity	Flash Structure	Sequential (MB/s) Standard-Temp.		Sequential (MB/s) Wide-Temp.	
		Read	Write	Read	Write
128GB	128GB x1, BGA(DDP) 112Layers	1,100	80	1,100	80
256GB	128GB x2, BGA(DDP) 112Layers	2,100	160	2,000	150
512GB	256GB x2, BGA(QDP) 112Layers	3,800	340	3,200	300
1TB	256GB x4, BGA(QDP) 112Layers	3,800	600	3,300	550
2TB	512GB x4, BGA(ODP) 112Layers	3,400	600	3,300	600
4TB	1TB x4, BGA(ODP) 112Layers	3,400	400	-	-

Notes:

1. Performance may differ according to flash configuration, use condition, environment and platform.
2. Performance specification is under that Thermal Throttling has not worked yet.
3. Performance is measured with the follow conditions
   (a.) CrystalDiskMark 7.0.0 with QD8T1, 1GB range for Burst sequential.
   (b.) Fio on Linux v5.10.32-ryder-20211006 with QD32T1, and SSD is fully written for Sustained sequential.
   (c.) OS: Win10 64bit for Burst sequential.
   (d.) OS: Ubuntu 20.04.2 LTS for Sustained sequential.
   (e.) AMD Ryzen 7 5800X 8-Core Processor
4. Measurement environment: Room temperature: 20~25℃, humidity: 40~60%RH, DC+3.3V condition.

- **Burst Random Read/Write Performance (IOPS)**

Capacity	Flash Structure	Random (IOPS) Standard-Temp.		Random (IOPS) Wide-Temp.	
		Read	Write	Read	Write
128GB	128GB x1, BGA(DDP) 112Layers	110K	220K	60K	130K
256GB	128GB x2, BGA(DDP) 112Layers	200K	400K	110K	245K
512GB	256GB x2, BGA(QDP) 112Layers	450K	700K	220K	450K
1TB	256GB x4, BGA(QDP) 112Layers	700K	800K	380K	500K
2TB	512GB x4, BGA(ODP) 112Layers	600K	750K	400K	700K
4TB	1TB x4, BGA(ODP) 112Layers	500K	700K	-	-

- **Sustained Random Read/Write Performance (IOPS)**

Capacity	Flash Structure	Random (IOPS) Standard-Temp.		Random (IOPS) Wide-Temp.	
		Read	Write	Read	Write
128GB	128GB x1, BGA(DDP) 112Layers	40K	1K	23K	1K
256GB	128GB x2, BGA(DDP) 112Layers	80K	1K	45K	1K
512GB	256GB x2, BGA(QDP) 112Layers	140K	2K	80K	2K
1TB	256GB x4, BGA(QDP) 112Layers	180K	2K	150K	2K
2TB	512GB x4, BGA(ODP) 112Layers	180K	1K	180K	1K
4TB	1TB x4, BGA(ODP) 112Layers	100K	1K	-	-

Notes:

1. Performance may differ according to flash configuration, use condition, environment and platform.
2. Performance specification is under that Thermal Throttling has not worked yet.
3. Performance is measured with the follow conditions
   - (f.) IOmeter v1.1.0 with QD32T16, 1GB range for 4KB Burst random.
   - (g.) Fio on Linux v5.10.32-ryder-20211006 with QD32T8, and SSD is fully written for 4KB Sustained random.
   - (h.) OS: Win10 64bit for Burst random.
   - (i.) OS: Ubuntu 20.04.2 LTS for Sustained random.
   - (j.) AMD Ryzen 7 5800X 8-Core Processor
4. Measurement environment: Room temperature: 20~25℃, humidity: 40~60%RH, DC+3.3V condition.

2.4. POR/SPOR Standby Ready Time

- **POR/SPOR Ready Time**

Capacity	POR ready time		SPOR ready time	
	Typ.	Max.	Typ.	Max.
128GB	600	800	3,000	6,000
256GB	600	800	3,000	6,000
512GB	600	800	3,000	8,000
1TB	600	800	3,000	13,000
2TB	600	800	3,000	16,000
4TB	600	800	3,000	16,000

Unit: ms

Notes:

1. POR/SPOR stands for following:
   (a.) POR: Power On Ready. (The ready time variation depends on data recover size.)
   (b.) SPOR: Power On Ready after Sudden Power Off. (The ready time variation depends on data recover size.)
2. POR/SPOR ready time stands for following:
   Power on Time: From Power On to SSD response after drive ready.
3. Measurement environment: Room temperature: 20~25℃, humidity: 40~60%RH, DC+3.3V condition.
4. These data will be affected by different platforms and conditions.

2.5. Thermal Throttling

The purpose of thermal throttling is to prevent any components in a SSD from over-heating during read and write operations. The controller is designed with an on-die thermal sensor and with its accuracy, firmware can apply different levels of throttling to achieve the purpose of protection efficiently and proactively via S.M.A.R.T. reading.

- **Purpose of Thermal Throttling:**
  - In order to keep the optimal performance in the safe range of the temperature.

- **Thermal sensors:**
  - There are controller on-die sensor & external thermal sensor to detect SSD temperature. (The thermal sensor is shown below. The picture is for reference only).
  - Controller on-die sensor detects controller temperature itself, while external thermal sensor helps to detect NAND temperature.
  - S.M.A.R.T. value shows the NAND temperature as Thermal Throttling triggered point.

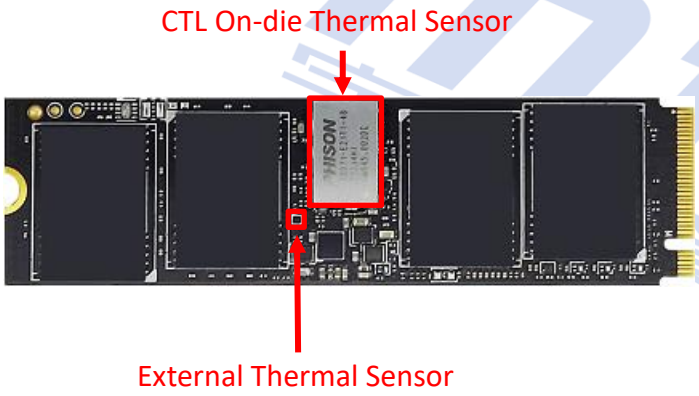

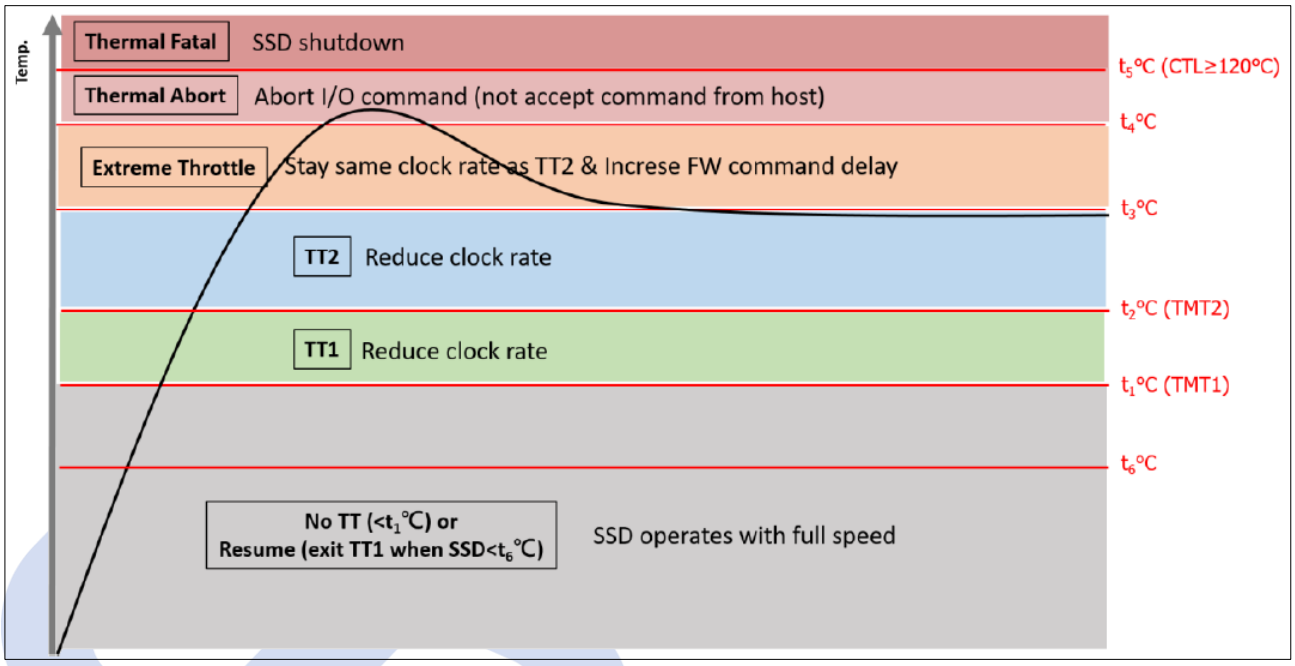

Figure 2-1 Thermal Throttling Schematic

	Stage	Status	Operation temp. of Normal-temp. grade: 0~70°C	Operation temp. of Wide-temp. grade: -40~85°C (applicable for 4096GB normal-temp. grade[2])
t_1/t_6	No TT/Resume	SSD operates with full speed	<76°C / <72°C	<82°C / <74°C
t_1	TT1	Reduce clock rate	76°C	82°C
t_2	TT2	Reduce more clock rate	78°C	85°C
t_3	Extreme Throttle (TT Protect)	Stay same clock rate as TT2 & Increase FW command delay	80°C	95°C
t_4	Thermal Abort	Abort I/O command (not accept I/O command from host)	83°C	98°C
t_5	Thermal Fatal	SSD shutdown	85°C (or CTL ≥ 120°C)	100°C (or CTL ≥ 120°C)

Notes:

1. Operation temp. in Thermal Throttling Temperature Setting table means NAND temperature, which can be read by S.M.A.R.T.
2. Due to large die design, 4TB normal-temp. grade utilizes special thermal throttling setting.

2.6. TCG Opal 2.0 (Optional)

The Opal specification is a set of specifications for self-encrypting drives published by the Trusted Computing Group (TCG), a non-profit organization that develops, defines, and promotes standards and specifications for secure computing. The Opal Security Subsystem Class(SSC) 2.0 defines the details of data management in storage devices and the classes authority for data access, and secures data from theft and tampering by unauthorized persons who are able to gain access to the storage device or host system.

TCG Opal 2.0 Main Features:

- AES 256-bit Hardware Self Encryption
- Deploy Storage Device & Take Ownership:

  The Storage Device is integrated into its target system and ownership transferred by setting or changing the Storage Device's owner credential.
- Activate or Enroll Storage Device:

  LBA ranges are configured and data encryption and access control credentials (re)generated and/or set on the Storage Device. Access control is configured for LBA range unlocking.
- Lock & Unlock Storage Device:

  Unlocking of one or more LBA ranges by the host and locking of those ranges under host control via either an explicit lock or implicit lock triggered by a reset event. MBR shadowing provides a mechanism to boot into a secure pre-boot authentication environment to handle device unlocking.
- Repurpose & End-of-Life:

  Erasure of data within one or more.
- Physical Presence SID (PSID):

  PSID is defined by TCG OPAL as a 32-character string and the purpose is to revert SSD back to its manufacturing setting when the drive is still OPAL-activated. PSID code can be printed on a SSD label when an OPAL-activated SSD supports PSID revert feature.

3. ENVIRONMENTAL SPECIFICATIONS

3.1. Environmental Conditions

3.1.1. Temperature Specification

	Mode	Min.	Max.	Unit
Temperature Ranges	Operation (Standard)	0	70	°C
	Operation (Wide)	-40	85	°C
	Storage	-40	85	°C
Humidity	Operation	5	90	%
	Storage	5	93	%
Temperature Cycle Test	Operation (Standard)	0	70	°C
	Operation (Wide)	-40	85	°C
	Storage	-40	85	°C

Notes:

The operation temperature means the case temperature. Airflow is suggested and it will allow device to be operated at appropriate temperature for each component during heavy workloads environment.

3.1.2. Mechanical Specification

Items			Condition
Shock	Non-operational	Acceleration Force	1500G 0-p with half sine wave (0.5ms)
Vibration	Non-operational	Frequency/Displacement	20Hz~80Hz/1.52mm
		Frequency/Acceleration	80Hz~2000Hz/20G p-p with sine wave
Bending	Non-operational	≥ 20N	Hold 1min/5times
Drop	Non-operational	Height of Drop	80cm free fall
		Number of Drop	6 face of each unit
		Conflicting Material	Concrete floor

3.1.3. Electrostatic Discharge (ESD)

Specification	+/- 4KV
EN 55024, CISPR 35 EN 61000-4-2 and IEC 61000-4-2	Device functions are affected, but EUT will be back to its normal or operational state automatically.

3.1.4. EMI Compliance

Specification
EN 55032/55035, CISPR 32 (CE)
AS/NZS CISPR 32 (CE)
ANSI C63.4 (FCC)
VCCI-CISPR 32 (VCCI)
CNS 13438 (BSMI)

3.1.5. Certification & Compliance

Specification
RoHS
WHQL
PCI Express Base 4.0
UNH-IOL NVM Express Logo

3.2. TBW (TeraBytes Written) and DWPD (Drive Write Per Day)

Capacity	Flash Type	TBW	DWPD
128GB	128GB x1, BGA(DDP) 112Layers	86	0.62
256GB	128GB x2, BGA(DDP) 112Layers	248	0.88
512GB	256GB x2, BGA(QDP) 112Layers	661	1.18
1TB	256GB x4, BGA(QDP) 112Layers	1,341	1.20
2TB	512GB x4, BGA(ODP) 112Layers	2,876	1.28
4TB	1TB x4, BGA(ODP) 112Layers	5,107	1.14

Notes:

1. TBW is measured by JEDEC Client 219A workload and calculated with PE count = 3000.
2. TBW may differ according to flash configuration and platform configuration.
3. DWPD is calculated based on 3-year lifetime.
4. DWPD = TBW / (365 x 3years x User capacity)
5. The SSD supports trim function. If Operation System does not support trim command, performance and TBW will be affected. (Like certain Windows OS, Linux kernel version before 2.6.33, other OS please refer to respective user manual)
6. The endurance of SSD could be estimated based on user behavior, NAND endurance cycles, and write amplification factor.

3.3. UBER

Capacity	UBER
128GB ~ 4TB	< 1 sector per 10^{16} bits read

Notes:

1. UBER (Uncorrectable Bit Error Rates) means the uncorrectable error per bits read.
2. UBER = FER (fail rate) / Data Size (user data bit).
3. FER = uncorrectable ECC frame number / total ECC frame number.
4. The LDPC for TLC ECC capability > 120bit/KB.

3.4. MTBF

MTBF, Mean Time between Failures, is a measure of reliability of a device. Its value represents the average time between a repair and the next failure. The unit of MTBF is in hours. The higher the MTBF value, the higher the reliability of the device.

Our MTBF result is based on simulation software (Relex 7.3). Please note that a lower MTBF should be expected for higher capacity drives, and we apply the lowest MTBF for all capacities.

Capacity	MTBF
128GB ~ 4TB	2 million hours

4. ELECTRICAL SPECIFICATIONS

4.1. Supply Voltage

Parameter	Rating
Operating Voltage	3.3V ± 5%
Rise Time (Max/Min)	100ms / 0.1ms
Fall Time (Max/Min)	5s / 10ms
Min. off Time[Note1]	1s

Notes:

1. Minimum time between power removed from SSD (Vcc < 100 mV) and power re-applied to the drive.
2. Ensure the voltage of each power domain in SSD has enough time to discharge less than 0.1V.
3. Rise Time during from 10% to 90% of 3.3V.
4. Fall Time during from 90% to 10% of 3.3V.

4.2. Power Consumption

Capacity	Flash Configuration	Standard-Temp.		Wide-Temp.		Idle
		Read	Write	Read	Write	
128GB	128GB x1, BGA(DDP) 112Layers	2,900	2,300	2,700	2,100	1,500
256GB	128GB x2, BGA(DDP) 112Layers	4,200	2,900	3,400	2,500	1,500
512GB	256GB x2, BGA(QDP) 112Layers	5,200	3,800	3,800	3,200	1,500
1TB	256GB x4, BGA(QDP) 112Layers	5,300	4,200	4,000	3,900	1,500
2TB	512GB x4, BGA(ODP) 112Layers	4,200	4,000	4,200	4,000	1,500
4TB	1TB x4, BGA(ODP) 112Layers	5,100	4,800	-	-	1,500

Unit: mW

Notes:

1. Use CrystalDiskMark 7.0.0 with the setting of 1GB. Sequentially read and write the disk for 5 times, and measure power consumption during sequential Read [1/5]~[5/5] or sequential Write [1/5]~[5/5].
2. The measured power voltage is 3.3V.
3. Idle power consumption is measured at idle state with no write/read operation.
4. It will not enter LPM (Low Power Mode) to avoid complex compatibility issues.
5. Power consumption may differ according to flash configuration, use condition, environment and platform.
6. Measurement environment: Room temperature: 20~25℃, humidity: 40~60%RH, DC+3.3V condition.

5. INTERFACE

5.1. Pin Assignment and Descriptions

The follow table defines the signal assignment of the internal NGFF connector for SSD usage, described in the PCI Express M.2 Specification version 1.1 of the PCI-SIG.

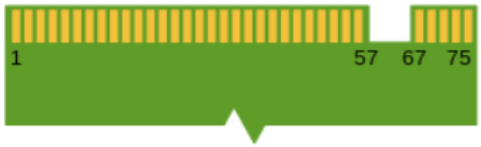

Pin #	PCIe Pin	Description
1	GND	Ground
2	3.3V	3.3V source
3	GND	Ground
4	3.3V	3.3V source
5	PETn3	PCIe TX Differential signal defined by the PCI Express M.2 spec
6	N/C	No connect
7	PETp3	PCIe TX Differential signal defined by the PCI Express M.2 spec
8	PLN# (I)(0/3.3V)	Power Loss Notification
9	GND	Ground
10	LED+1# (O)(OD)(3.3V)	These signals are used to allow the add-in card to provide status indicators via LED devices that will be provided by the system. Open drain, active low signal.
11	PERn3	PCIe RX Differential signal defined by the PCI Express M.2 spec
12	3.3V	3.3V source
13	PERp3	PCIe RX Differential signal defined by the PCI Express M.2 spec
14	3.3V	3.3V source
15	GND	Ground
16	3.3V	3.3V source
17	PETn2	PCIe RX Differential signal defined by the PCI Express M.2 spec
18	3.3V	3.3V source
19	PETp2	PCIe RX Differential signal defined by the PCI Express M.2 spec
20	N/C	No connect
21	GND	Ground
22	N/C	No connect
23	PERn2	PCIe RX Differential signal defined by the PCI Express M.2 spec

Pin #	PCIe Pin	Description
24	N/C	No connect
25	PERp2	PCIe RX Differential signal defined by the PCI Express M.2 spec
26	N/C or GPIO Write Protect	No connect Optional: GPIO Write Protect
27	GND	Ground
28	N/C	No connect
29	PETn1	PCIe TX Differential signal defined by the PCI Express M.2 spec
30	PLA_S3# (O)(0/3.3V)	Power Loss Acknowledge Open Drain with pull-up on platform
31	PETp1	PCIe TX Differential signal defined by the PCI Express M.2 spec
32	GND	Ground
33	GND	Ground
34	N/C	No connect
35	PERn1	PCIe RX Differential signal defined by the PCI Express M.2 spec
36	N/C	No connect
37	PERp1	PCIe RX Differential signal defined by the PCI Express M.2 spec
38	GND	Ground
39	GND	Ground
40	SMB_CLK (I/O)(0/1.8V)	SMBus Clock; Open Drain with pull-up on platform.
41	PETn0	PCIe TX Differential signal defined by the PCI Express M.2 spec
42	SMB_DATA (I/O)(0/1.8V)	SMBus Data; Open Drain with pull-up on platform.
43	PETp0	PCIe TX Differential signal defined by the PCI Express M.2 spec
44	ALERT#(O)(0/1.8V)	Alert notification to master Open Drain with pull-up on platform Active low.
45	GND	Ground
46	N/C	No connect
47	PERn0	PCIe RX Differential signal defined by the PCI Express M.2 spec
48	N/C	No connect
49	PERp0	PCIe RX Differential signal defined by the PCI Express M.2 spec
50	PERST#(I)(0/3.3V)	PE-Reset is a functional reset to the card as defined by the PCIe Mini CEM specification.
51	GND	Ground
52	CLKREQ#(I/O)(0/3.3V)	Clock Request is a reference clock request signal as defined by the PCIe Mini CEM specification Also used by L1 PM Sub-states.

Pin #	PCIe Pin	Description
53	REFCLKn	PCIe Reference Clock signals (100 MHz) defined by the PCI Express M.2 spec.
54	PEWAKE#(I/O)(0/3.3V)	PCIe PME Wake. Open Drain with pull up on platform Active Low.
55	REFCLKp	PCIe Reference Clock signals (100 MHz) defined by the PCI Express M.2 spec.
56	Reserved for MFG DATA	Manufacturing Data line. Used for SSD manufacturing only. Not used in normal operation. Pins should be left N/C in platform Socket.
57	GND	Ground
58	Reserved for MFG CLOCK	Manufacturing Clock line. Used for SSD manufacturing only. Not used in normal operation. Pins should be left N/C in platform Socket.
59	Module Key M	Module Key
60	Module Key M	
61	Module Key M	
62	Module Key M	
63	Module Key M	
64	Module Key M	
65	Module Key M	
66	Module Key M	
67	N/C or GPIO Eease	No Connect Optional: GPIO Erase
68	N/C	No Connect
69	N/C	No Connect for PCIe.
70	3.3V	3.3V source
71	GND	Ground
72	3.3V	3.3V source
73	VIO_CFG (O)	Sideband IO voltage indication. Signal with a weak pull-up on Platforms that support this function. When the Adapter supports 3.3V on the sideband IO signals, it must be connected to ground on the Adapter, otherwise it must be left unconnected on the Adapter.
74	3.3V	3.3V source
75	GND	CONFIG_2 = Ground

6. SUPPORTED COMMANDS

6.1. NVMe Command List

Table 6-1 Admin Commands

Identifier	O/M	Command Description
00h	M	Delete I/O Submission Queue
01h	M	Create I/O Submission Queue
02h	M	Get Log Page
04h	M	Delete I/O Completion Queue
05h	M	Create I/O Completion Queue
06h	M	Identify
08h	M	Abort
09h	M	Set Features
0Ah	M	Get Features
0Ch	M	Asynchronous Event Request
10h	O	Firmware Activate
11h	O	Firmware Image Download
80h	O	Format NVM
81h	O	Security Send
82h	O	Security Receive

Table 6-2 I/O Commands

Identifier	O/M	Command Description
00h	O	Flush
01h	O	Write
02h	O	Read
04h	O	Write Uncorrectable
08h	O	Write Zeroes
09h	O	Dataset Management
0Ch	O	Verify

6.2. Identify Device Command

The following table details the sector data returned by the IDENTIFY DEVICE command.

Table 6-3 Identify Controller Data Structure

Bytes	O/M	Description	Default Value
01:00	M	PCI Vendor ID (VID)	0x1987
03:02	M	PCI Subsystem Vendor ID (SSVID)	0x1987
23:04	M	Serial Number (SN)	Serial Number
63:24	M	Model Number (MN)	Model Number
71:64	M	Firmware Revision (FR)	Firmware Name
72	M	Recommended Arbitration Burst (RAB)	0x04
75:73	M	IEEE OUI Identifier (IEEE)	Assigned by IEEE/RAC
76	O	Controller Multi-Path I/O and Namespace Sharing Capabilities (CMIC)	0x00
77	M	Maximum Data Transfer Size (MDTS)	0x06
79:78	M	Controller ID (CNTLID)	0x0000
83:80	M	Version (VER)	0x00010400
87:84	M	RTD3 Resume Latency (RTD3R)	0x000186A0
91:88	M	RTD3 Entry Latency (RTD3E)	0x004C4B40
95:92	M	Optional Asynchronous Events Supported (OAES)	0x00000000
99:96	M	Controller Attributes (CTRATT)	0x0002
101:100	O	Read Recovery Level support bitmap (RRLS)	0x00
110:102	-	Reserved	0x00
111	M	Controller Type, if support NVMe 1.4 shall be set to other than 0 (cntrltype)	0x01
127:112	O	FRU Globally Unique Identifier (FGUID[16])	0x00
129:128	O	Command Retry Delay Time 1 (CRDT1)	0x00
131:130	O	Command Retry Delay Time 2 (CRDT2)	0x00
133:132	O	Command Retry Delay Time 3 (CRDT3)	0x00
255:134	-	Reserved	0x00
257:256	M	Optional Admin Command Support (OACS)	0x0017
258	M	Abort Command Limit (ACL)	0x03
259	M	Asynchronous Event Request Limit (AERL)	0x03
260	M	Firmware Updates (FRMW)	0x12
261	M	Log Page Attributes (LPA)	0x1E
262	M	Error Log Page Entries (ELPE)	0x3E

Bytes	O/M	Description	Default Value
263	M	Number of Power States Support (NPSS)	0x04
264	M	Admin Vendor Specific Command Configuration (AVSCC)	0x01
265	O	Autonomous Power State Transition Attributes (APSTA)	0x01
267:266	M	Warning Composite Temperature Threshold (WCTEMP)	0x015D (Standard-temp.) 0x0163 (Wide-temp.)
269:268	M	Critical Composite Temperature Threshold (CCTEMP)	0x015F (Standard-temp.) 0x0166 (Wide-temp.)
271:270	O	Maximum Time for Firmware Activation (MTFA)	0x0064
275:272	O	Host Memory Buffer Preferred Size (HMPRE)	0x00004000
279:276	O	Host Memory Buffer Minimum Size (HMMIN)	0x00004000
295:280	O	Total NVM Capacity (TNVMCAP)	By capacity
311:296	O	Unallocated NVM Capacity (UNVMCAP)	0x00
315:312	O	Replay Protected Memory Block Support (RPMBS)	0x00
317:316	O	Extended Device Self-test Time (EDSTT)	0x001E
318	O	Device Self-test Options (DSTO)	0x00
319	M	Firmware Update Granularity (FWUG)	0x04
321:320	M	Keep Alive Support (KAS)	0x0000
323:322	O	Host Controlled Thermal Management Attributes (HCTMA)	0x0001
325:324	O	Minimum Thermal Management Temperature (MNTMT)	0x0111
327:326	O	Maximum Thermal Management Temperature (MXTMT)	0x015F (Standard-temp.) 0x0166 (Wide-temp.)
331:328	O	Sanitize Capabilities (SANICAP)	0xA0000002
335:332	O	Host Memory Buffer Min. Descriptor Entry Size (hmminds)	0x400
337:336	O	Host Memory Maximum Descriptor Entries (hmmaxd)	0x10
339:338	O	NVM Set ID Maximum (nsetidmax)	0x00
341:340	O	Endurance Group ID Maximum (endgidmax)	0x00
342	O	ANA Maximum Transition Time (anatt)	0x00
343	O	Asymmetric Namespace Access Capabilities (ANACAP)	0x00
347:344	O	ANA Group ID Maximum (anagrpmax)	0x00

Bytes	O/M	Description	Default Value
351:348	O	Number of ANA Group IDs (nanagrpid)	0x00
355:352	O	Persistent Event Log Size (PELS)	0x60
511:356	-	Reserved	0x00
NVM Command Set Attributes			
512	M	Submission Queue Entry Size (SQES)	0x66
513	M	Completion Queue Entry Size (CQES)	0x44
515:514	M	Maximum Outstanding Commands (MAXCMD)	0x0100
519:516	M	Number of Namespaces (NN)	0x00000001
521:520	M	Optional NVM Command Support (ONCS)	0x00DF
523:522	M	Fused Operation Support (FUSES)	0x0000
524	M	Format NVM Attributes (FNA)	0x00
525	M	Volatile Write Cache (VWC)	0x07
527:526	M	Atomic Write Unit Normal (AWUN)	0xFF
529:528	M	Atomic Write Unit Power Fail (AWUPF)	0x00
530	M	NVM Vendor Specific Command Configuration (NVSCC)	0x01
531	M	Namespace Write Protection Capabilities (NWPC)	0x00
533:532	O	Atomic Compare & Write Unit (ACWU)	0x0000
535:534	-	Reserved	0x0000
539:536	O	SGL Support (SGLS)	0x00000000
543:540	O	Maximum Number of Allowed Namespace, if supports ANA Reporting shall not be 0 and less than NN (MNAN)	0x00
767:544	-	Reserved	0x00
IO Command Set Attributes			
1023:768	M	NVM Subsystem NVMe Qualified Name (SUBNQN)	0x00
1791:1024	-	Reserved	0x00
2047:1792	-	Refer to the NVMe over Fabrics specification	0x00
2079:2048	M	Power State 0 Descriptor (PSD0)	Disable LPM: 0 Enable LPM: 0x0081031600401C52000000000 0000258000025800000316
2111:2080	O	Power State 1 Descriptor (PSD1)	Disable LPM: 0 Enable LPM:

			0x0081031600401C52010101010 0000258000002580000316
Bytes	**O/M**	**Description**	**Default Value**
2143:2112	O	Power State 2 Descriptor (PSD2)	Disable LPM: 0 Enable LPM: 0x0081031600401C52020202020 0000258000002580000316
2175:2144	O	Power State 3 Descriptor (PSD3)	Disable LPM: 0 Enable LPM: 0x0081031600401C52030303030 00003E8000003E8030003E8
2207:2176	O	Power State 4 Descriptor (PSD4)	Disable LPM: 0 Enable LPM: 0x0081031600401C52240404040 00186A00000138803000032
2239:2208	O	Power State 5 Descriptor (PSD5)	0x00
2271:2240	O	Power State 6 Descriptor (PSD6)	0x00
2303:2272	O	Power State 7 Descriptor (PSD7)	0x00
2335:2304	O	Power State 8 Descriptor (PSD8)	0x00
2367:2336	O	Power State 9 Descriptor (PSD9)	0x00
2399:2368	O	Power State 10 Descriptor (PSD10)	0x00
2431:2400	O	Power State 11 Descriptor (PSD11)	0x00
2463:2432	O	Power State 12 Descriptor (PSD12)	0x00
2495:2464	O	Power State 13 Descriptor (PSD13)	0x00
2527:2496	O	Power State 14 Descriptor (PSD14)	0x00
2559:2528	O	Power State 15 Descriptor (PSD15)	0x00
2591:2560	O	Power State 16 Descriptor (PSD16)	0x00
2623:2592	O	Power State 17 Descriptor (PSD17)	0x00
2655:2624	O	Power State 18 Descriptor (PSD18)	0x00
2687:2656	O	Power State 19 Descriptor (PSD19)	0x00
2719:2688	O	Power State 20 Descriptor (PSD20)	0x00
2751:2720	O	Power State 21 Descriptor (PSD21)	0x00
2783:2752	O	Power State 22 Descriptor (PSD22)	0x00
2815:2784	O	Power State 23 Descriptor (PSD23)	0x00

2847:2816	O	Power State 24 Descriptor (PSD24)	0x00
2879:2848	O	Power State 25 Descriptor (PSD25)	0x00
2911:2880	O	Power State26 Descriptor (PSD26)	0x00
2943:2912	O	Power State 27 Descriptor (PSD27)	0x00
2975:2944	O	Power State 28 Descriptor (PSD28)	0x00
3007:2976	O	Power State 29 Descriptor (PSD29)	0x00
3039:3008	O	Power State 30 Descriptor (PSD30)	0x00
3071:3040	O	Power State 31 Descriptor (PSD31)	0x00
Vendor Specific			
4095:3072	O	Vendor Specific (VS)	Vendor Reserved

Notes:

"O/M": O = Optional, M = Mandatory.

"-" : Not support

Table 6-4 Identify Namespace Data Structure & NVM Command Set Specific

Bytes	O/M	Description	Default Value
7:0	M	Namespace Size (NSZE)	-
15:8	M	Namespace Capacity (NCAP)	-
23:16	M	Namespace Utilization (NUSE)	-
24	M	Namespace Features (NSFEAT)	0x00
25	M	Number of LBA Formats (NLBAF)	0x01
26	M	Formatted LBA Size (FLBAS)	0x00
27	M	Metadata Capabilities (MC)	0x00
28	M	End-to-end Data Protection Capabilities (DPC)	0x00
29	M	End-to-end Data Protection Type Settings (DPS)	0x00
30	O	Namespace Multi-path I/O and Namespace Sharing Capabilities (NMIC)	0x00
31	O	Reservation Capabilities (RESCAP)	0x00
32	O	Format Progress Indicator (FPI)	0x00
33	O	Deallocate Logical Block Features (dlfeat)	0x09
35:34	O	Namespace Atomic Write Unit Normal (NAWUN)	0x0000
37:36	O	Namespace Atomic Write Unit Power Fail (NAWUPF)	0x0000
39:38	O	Namespace Atomic Compare & Write Unit (NACWU)	0x0000
41:40	O	Namespace Atomic Boundary Size Normal (NABSN)	0x0000

Bytes	O/M	Description	Default Value
43:42	O	Namespace Atomic Boundary Offset (NABO)	0x0000
45:44	O	Namespace Atomic Boundary Size Power Fail (NABSPF)	0x0000
47:46	O	Namespace Optimal IO Boundary (NOIOB)	0x0000
63:48	O	NVM Capacity (NVMCAP)	By capacity
65:64	O	Namespace Preferred Write Granularity (NPWG)	0x00
67:66	O	Namespace Preferred Write Alignment (NPWA)	0x00
69:68	O	Namespace Preferred Deallocation(Trim) Granularity (NPDG)	0x00
71:70	O	Namespace Preferred Deallocation(Trim) Alignment (NPDA)	0x00
73:72	O	Namespace Optimal Write Size (NOWS)	0x00
91:74	-	Reserved	0x00
95:92	O	ANA Groput Identifier (anagrpid)	0x00
98:96	-	Reserved	0x00
99	O	Namespace Attributes (NSATTR)	0x00
101:100	O	NVM Set Identifier (nvmsetid)	0x00
103:102	O	Endurange Group Identifier // NVMe 1.4 add (endgid)	0x00
119:104	O	Namespace Globally Unique Identifier (NGUID)	-
127:120	O	IEEE Extended Unique Identifier (EUI64)	-
131:128	M	LBA Format 0 Support (LBAF0)	0x01090000
135:132	O	LBA Format 1 Support (LBAF1)	0x000C0000
139:136	O	LBA Format 2 Support (LBAF2)	0x00000000
143:140	O	LBA Format 3 Support (LBAF3)	0x00000000
147:144	O	LBA Format 4 Support (LBAF4)	0x00000000
151:148	O	LBA Format 5 Support (LBAF5)	0x00000000
155:152	O	LBA Format 6 Support (LBAF6)	0x00000000
159:156	O	LBA Format 7 Support (LBAF7)	0x00000000
163:160	O	LBA Format 8 Support (LBAF8)	0x00000000
167:164	O	LBA Format 9 Support (LBAF9)	0x00000000
171:168	O	LBA Format 10 Support (LBAF10)	0x00000000
175:172	O	LBA Format 11 Support (LBAF11)	0x00000000
179:176	O	LBA Format 12 Support (LBAF12)	0x00000000
183:180	O	LBA Format 13 Support (LBAF13)	0x00000000
187:184	O	LBA Format 14 Support (LBAF14)	0x00000000

Bytes	O/M	Description	Default Value
191:188	O	LBA Format 15 Support (LBAF15)	0x00000000
383:192	-	Reserved	0x00
4095:384	O	Vendor Specific (VS)	0x00

Notes:

"O/M": O = Optional, M = Mandatory.

"-" : Not support

■ List of Identify Namespace Data Structure for Each Capacity

Capacity (GB)	Byte[7:0]: Namespace Size (NSZE)
128	EE7C2B0h
256	1DCF32B0h
512	3B9E12B0h
1024	773BD2B0h
2048	EE7752B0h
4096	1DCEE52B0h

6.3. SMART Attributes

■ **SMART Attributes (Log Identifier 02h)**

Bytes Index	Bytes	Description	Detail
[0]	1	Critical Warning	Error occurs if value of the bits are not zero
[2:1]	2	Composite Temperature	Flash temperature is detected by thermal sensor (Unit: Kelvin)
[3]	1	Available Spare	Remaining spare capacity available (Unit: %)
[4]	1	Available Spare Threshold	Spare capacity threshold (Unit: %)
[5]	1	Percentage Used	Average of the flash's block erase count / NAND EOL erase count (Unit: %)
[31:6]	26	Reserved	-
[47:32]	16	Data Units Read	(in LBAs) Contains the number of 512byte data units the host has read from the controller. This value is reported in thousands (i.e, a value of 1 corresponds to 1000 units of 512 bytes read) and count up.
[63:48]	16	Data Units Written	(in LBAs) Contains the number of 512byte data units the host has written from the controller. This value is reported in thousands (i.e, a value of 1 corresponds to 1000 units of 512 bytes written) and count up.
[79:64]	16	Host Read Commands	The number of read commands completed by the controller
[95:80]	16	Host Write Commands	The number of write commands completed by the controller
[111:96]	16	Controller Busy Time	The amount of time the controller is busy with I/O commands (Unit: minute)
[127:112]	16	Power Cycles	Normal power on/off cycles count
[143:128]	16	Power On Hours	Device power on time (Unit: hour)
[159:144]	16	Unsafe Shutdowns	Abnormal power on/off cycles count
[175:160]	16	Media and Data Integrity Errors	The number of occurrences where the controller detected an unrecovered data integrity error, such as ECC, CRC checksum failure.
[191:176]	16	Number of Error Information Log Entries	The number of Error Information log entries over the life of the controller.
[195:192]	4	Warning Composite Temperature Time	The amount of time that temp. over warning threshold, but less than critical threshold (Unit: minute)

Bytes Index	Bytes	Description	Detail
[199:196]	4	Critical Composite Temperature Time	The amount of time that temp. over critical threshold (Unit: minute)
[201:200]	2	Temperature Sensor 1 (N/A)	Unit: Kelvin
[203:202]	2	Temperature Sensor 2 (N/A)	Controller junction temperature (Unit: Kelvin)
[205:204]	2	Temperature Sensor 3 (N/A)	Unit: Kelvin
[207:206]	2	Temperature Sensor 4 (N/A)	Unit: Kelvin
[209:208]	2	Temperature Sensor 5 (N/A)	Unit: Kelvin
[211:210]	2	Temperature Sensor 6 (N/A)	Unit: Kelvin
[213:212]	2	Temperature Sensor 7 (N/A)	Unit: Kelvin
[215:214]	2	Temperature Sensor 8 (N/A)	Unit: Kelvin
[219:216]	4	Thermal Management Temperature 1 Transition Count	The number that device enters Thermal Management Temperature 1 (TMT1) Transition Count
[223:220]	4	Thermal Management Temperature 2 Transition Count	The number that device enters Thermal Management Temperature 2 (TMT2) Transition Count
[227:224]	4	Total Time For Thermal Management Temperature 1	The total time in Thermal Management Temperature 1 stage (Unit: second)
[231:228]	4	Total Time For Thermal Management Temperature 2	The total time in Thermal Management Temperature 2 stage (Unit: second)
[511:232]	280	Reserved	

7. PHYSICAL DIMENSION

- **Dimension of M.2 2280-D2-M: 80mm(L) x 22mm(W) x 2.15mm(H)**

Top View

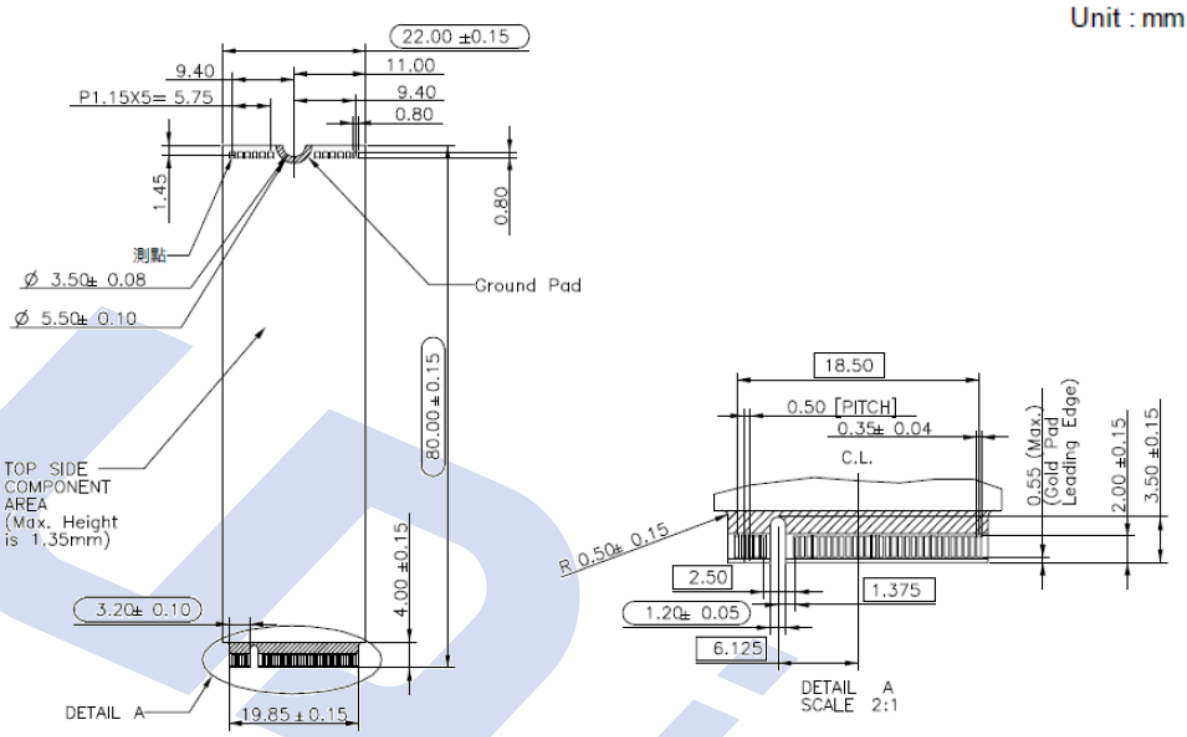

Bottom View

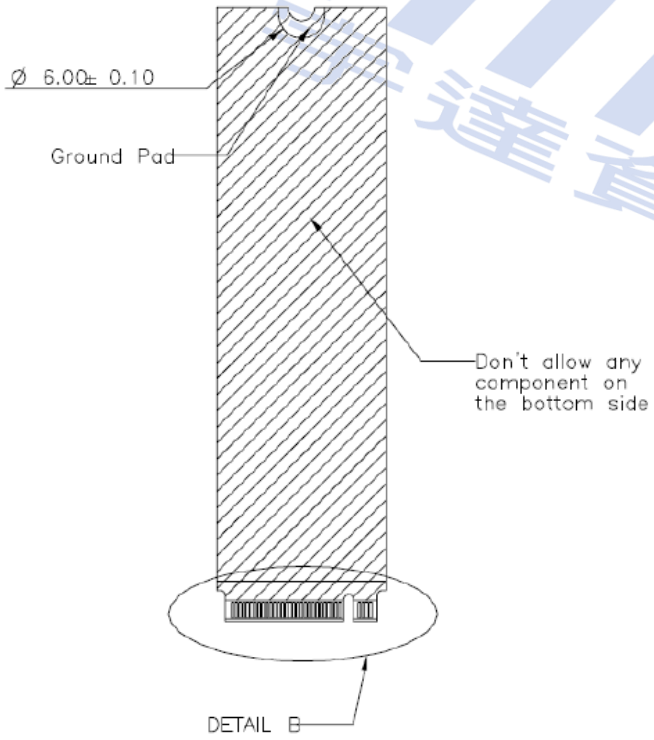

Side View

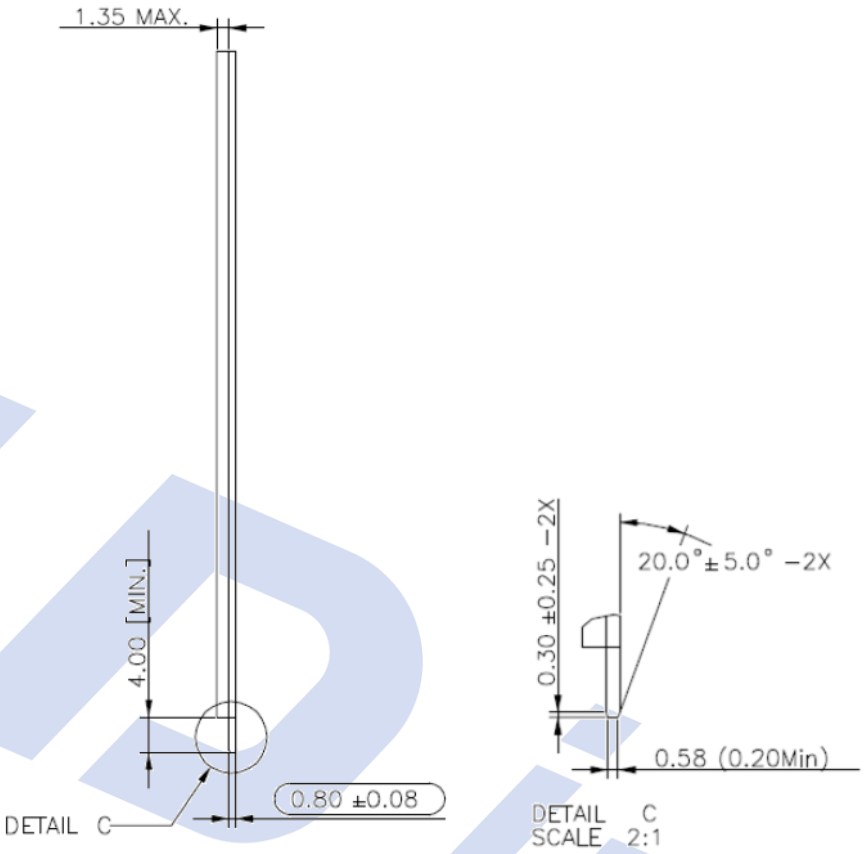

***Notes:**

1. = Max Component Height
2. = No Component
3. = No Component / Signal Vias / Signal Copper / Printing
4. General Tolerance ±0.15mm
5. are critical dimensions

8. TERMINOLOGY

The following table is to list out the acronyms that have been applied throughout the document.

Term	Definitions
ASPM	Active States Power Management
APST	Autonomous Power State Transition
LBA	Logical block addressing
MTBF	Mean time between failures
PCIe	PCI Express / Peripheral Component Interconnect Express
S.M.A.R.T.	Self-monitoring, analysis and reporting technology

9. BARCODE DESCRIPTION

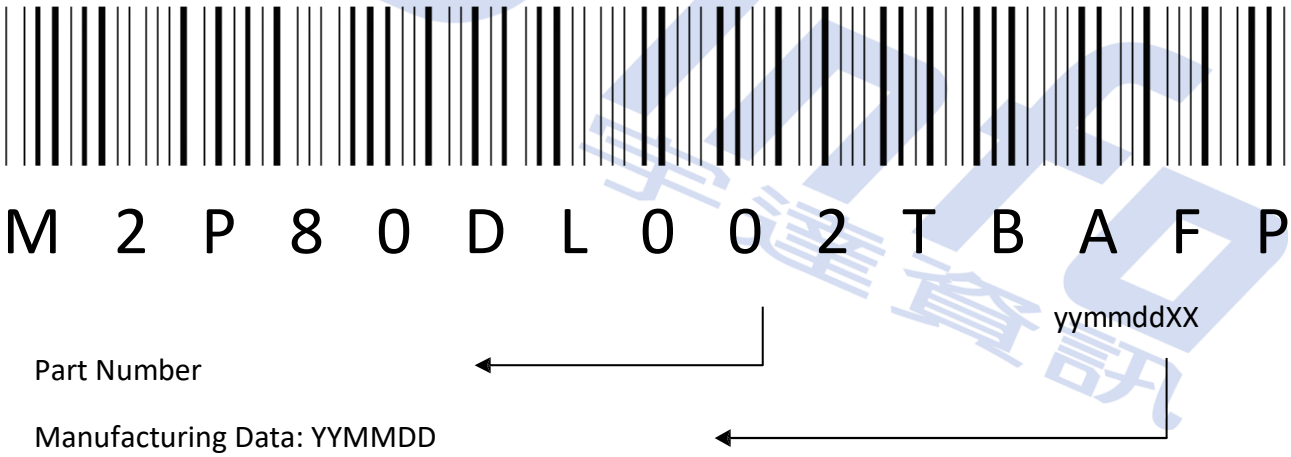

10. PARTNUMBER DECODER

M2P-80DL$X^8X^9X^{10}X^{11}X^{12}X^{13}X^{14}X^{15}X^{16}X^{17}$

$X^1X^2X^3$	X^4X^5	X^6X^7	X^8 X^9 X^{10} X^{11} X^{12}	X^{13}	X^{14}	X^{15}	$X^{16}X^{17}$
M2P	80	DL	128GB 256GB 512GB 001TB 002TB 004TB	A: 3D TLC Standard (0ºC ~ +70ºC) B: 3D TLC Industrial (-40ºC ~ +85ºC)	F	P	blank